VCC5

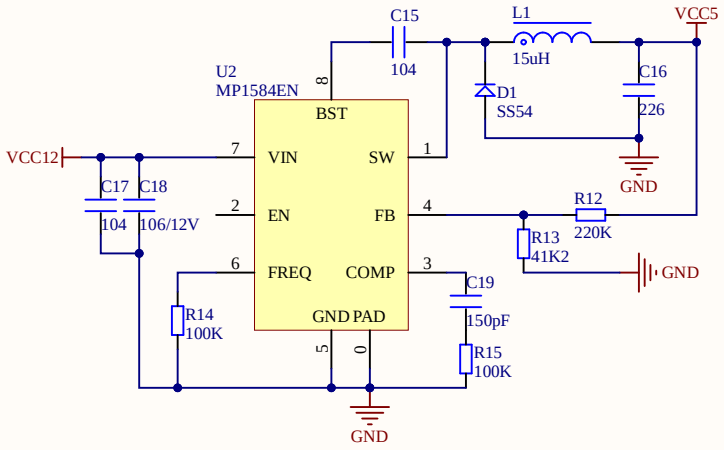

电源输出

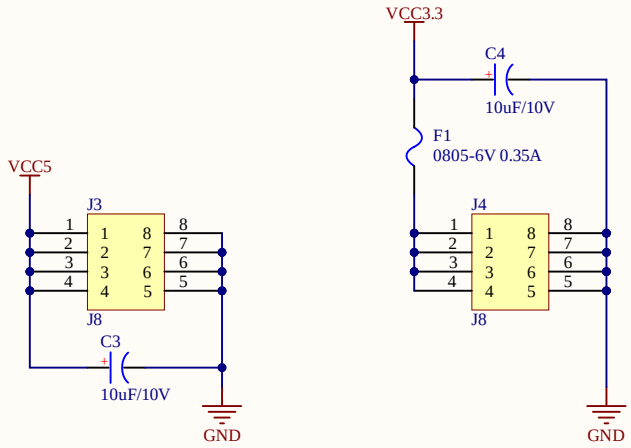

VCC3.3

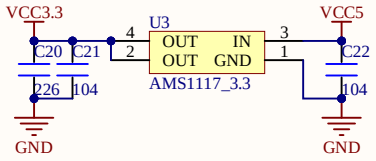

USB电源输出

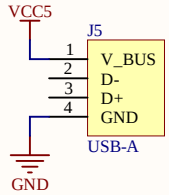

Title	Power	
Size A4	Number	Revision
Date: 10/29/2024		Sheet of
File: E:\work\..\Power.SchDoc		Drawn By: Xiang Guo

步进电机

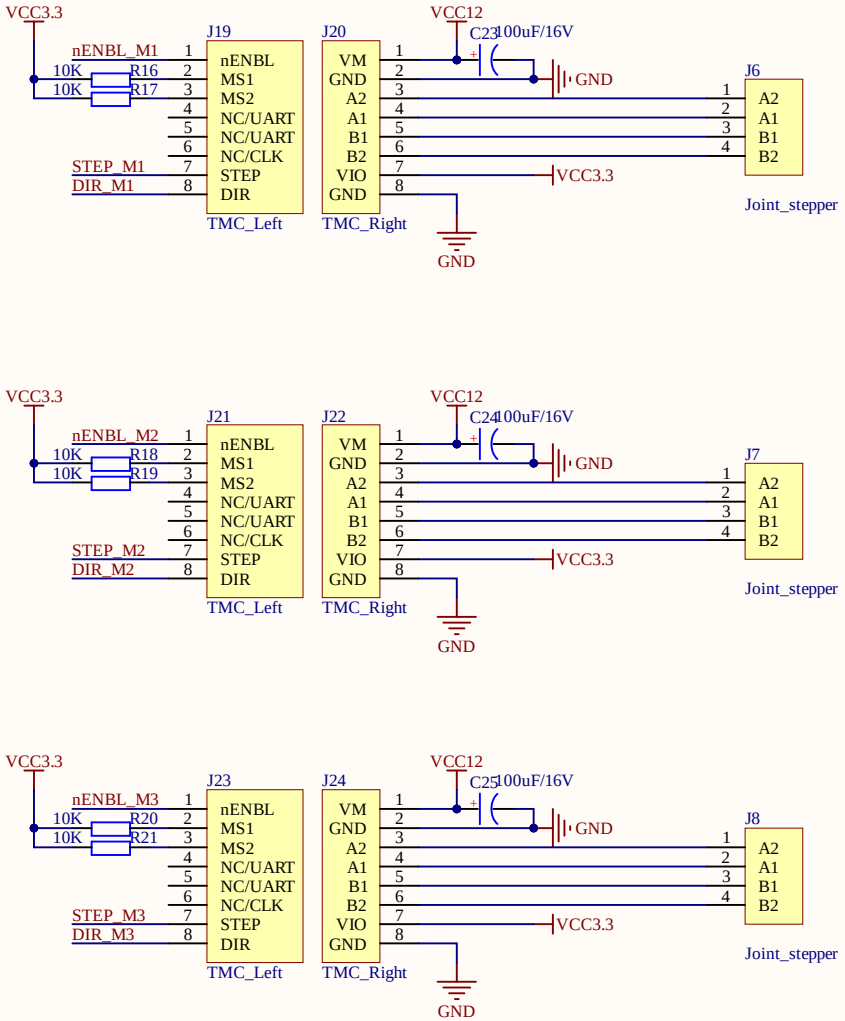

Title	Stepper	
Size A4	Number	Revision
Date: 10/29/2024		Sheet of
File: E:\work\..\Stepper.SchDoc		Drawn By: Xiang Guo

STM32

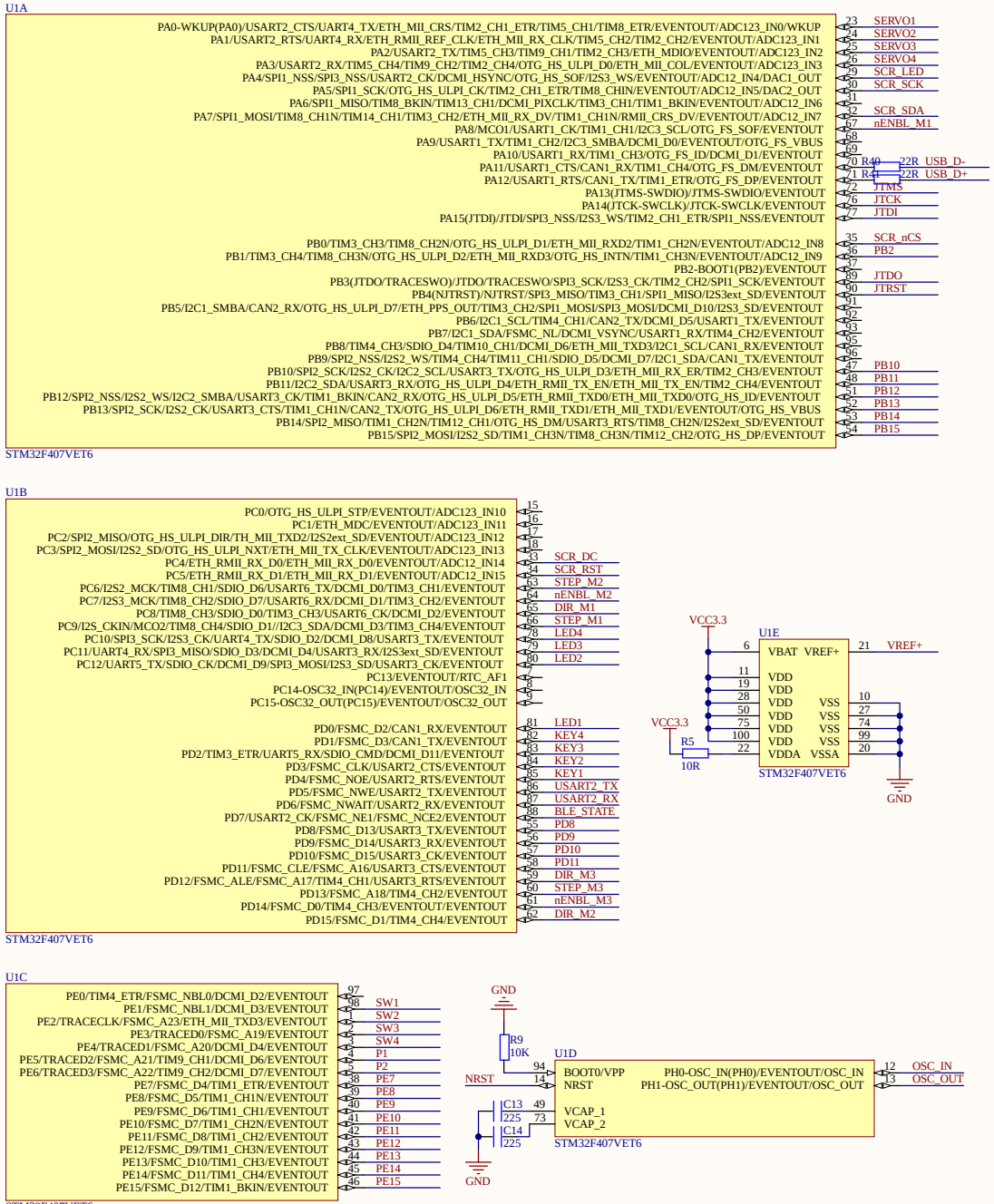

周边电路

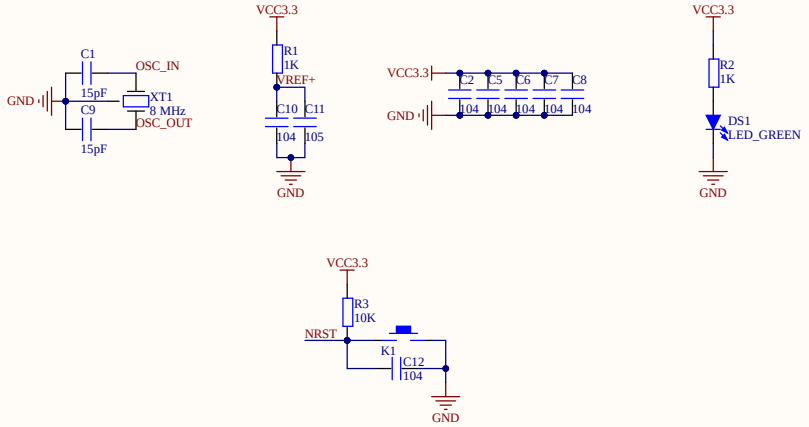

供电 & 开关

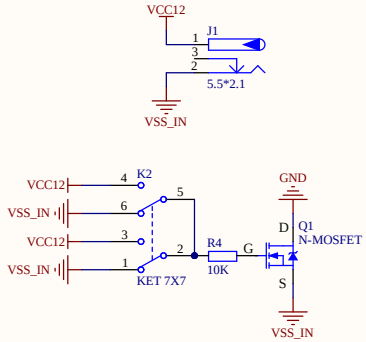

20pin JTAG

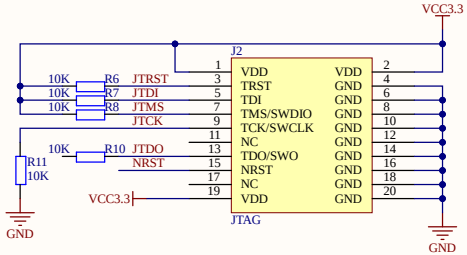

Title	STM32 Core	
Size A3	Number	Revision
Date: 10/29/2024		Sheet of
File: E:\work\..\STM32 core.SchDoc		Drawn By: Xiang Guo

驱动输出

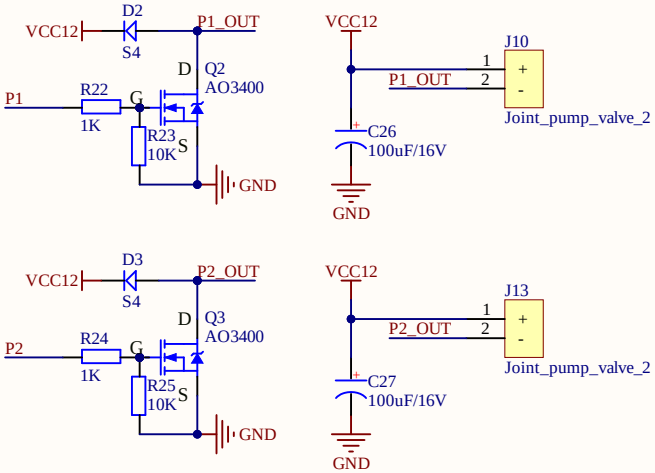

舵机

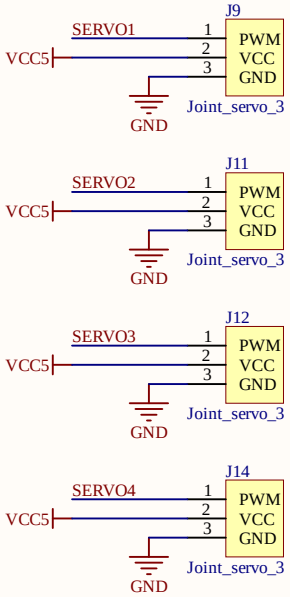

通用IO

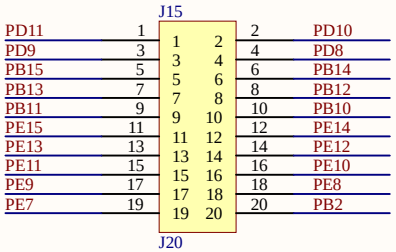

限位开关输入

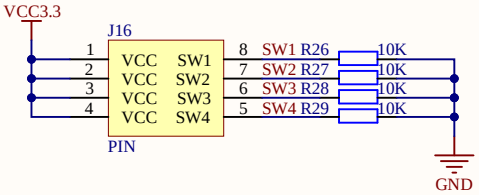

Title	Tags	
Size A4	Number	Revision
Date: 10/29/2024		Sheet of
File: E:\work\..\Tags.SchDoc		Drawn By: Xiang Guo

USB2.0 Type-C

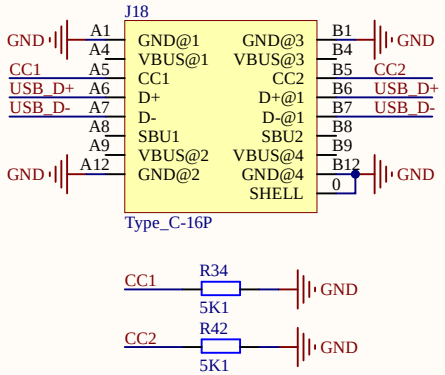

SPI屏幕

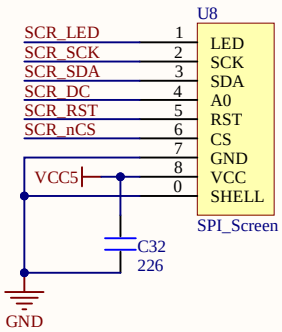

蓝牙插口

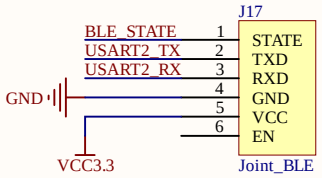

用户按键

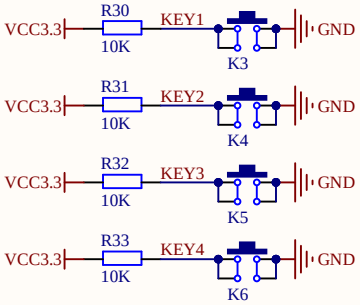

LED

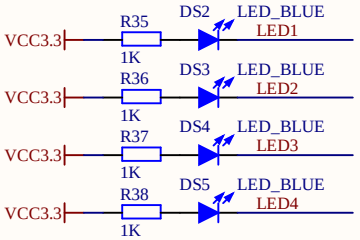

Title	User Interface	
Size A4	Number	Revision
Date: 10/29/2024		Sheet of
File: E:\work\..\User Interfaces.SchDoc		Drawn By: Xiang Guo